ECT and A/T Indicator

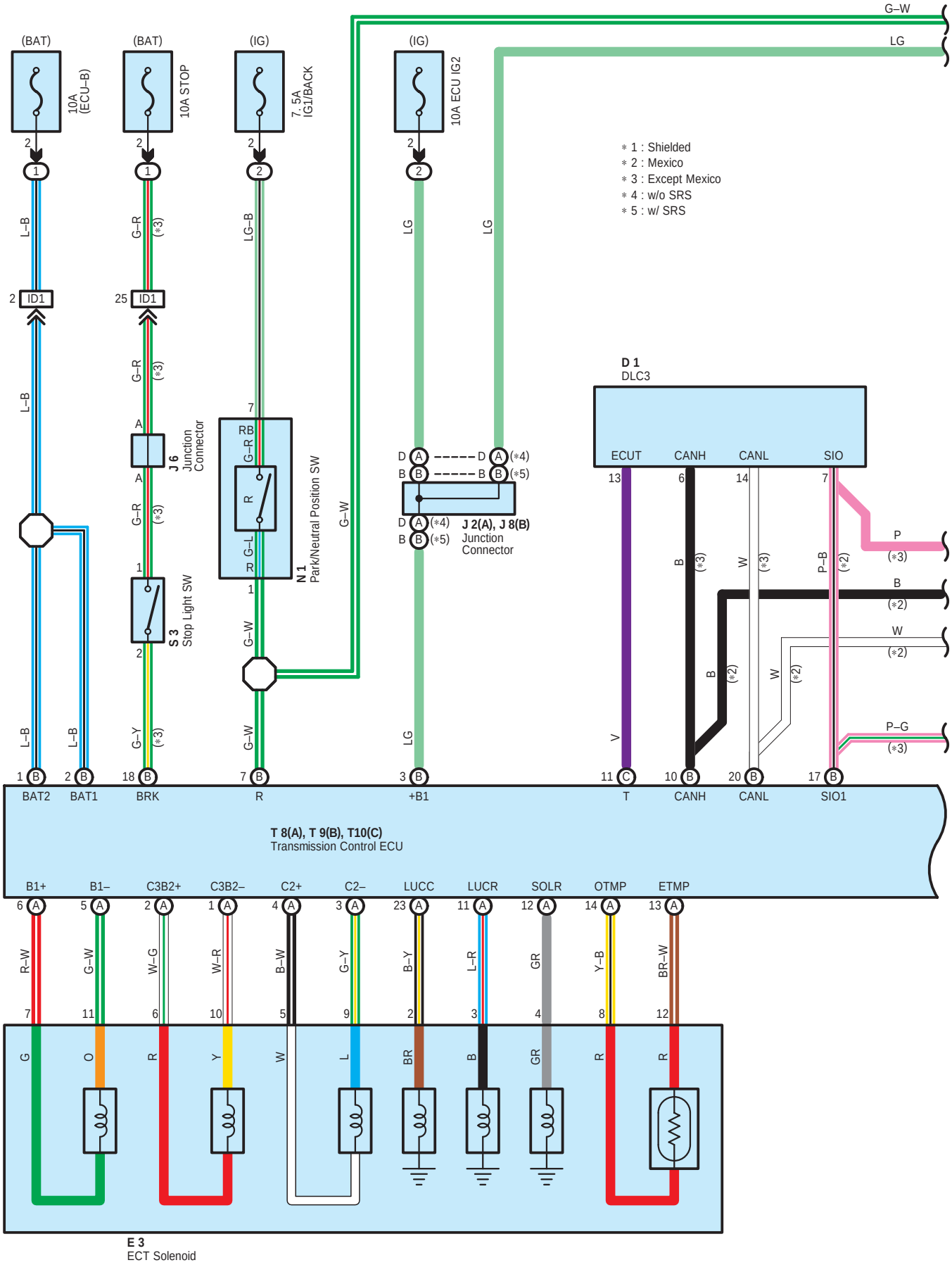

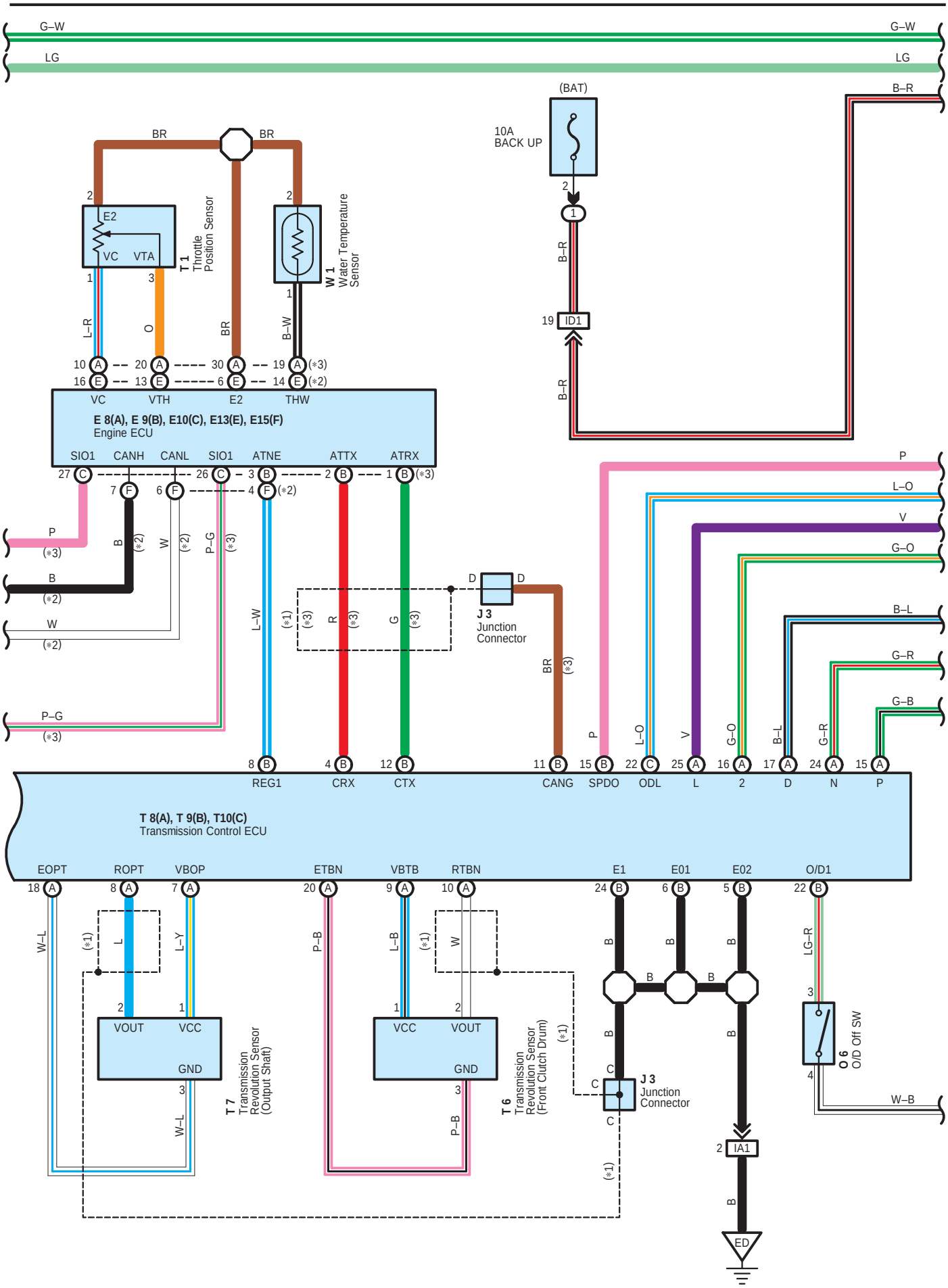
G–W
LG
(BAT)
B–R
10A
BACK UP
BR
T 1
Throttle
Position Sensor
W 1
Water Temperature
Sensor
E2
VC
VTA
L–R
O
B–W
ID1
E 8(A), E 9(B), E10(C), E13(E), E15(F)
Engine ECU
SIO1
CANH
CANL
ATNE
ATTX
ATRX
VTH
THW
P
B
W
P–G
L–W
R
G
J 3
Junction
Connector
L–O
V
G–O
B–L
G–R
G–B
REG1
CRX
CTX
CANG
SPDO
ODL
L
2
D
N
T 8(A), T 9(B), T10(C)
Transmission Control ECU
EOPT
ROPT
VBOP
ETBN
VBTB
RTBN
E1
E01
E02
O/D1
W–L
L–Y
P–B
L–B
LG–R
VOUT
VCC
GND
T 7
Transmission
Revolution Sensor
(Output Shaft)
T 6
Transmission
Revolution Sensor
(Front Clutch Drum)
O 6
O/D Off SW
W–B
IA1
ED

ECT and A/T Indicator

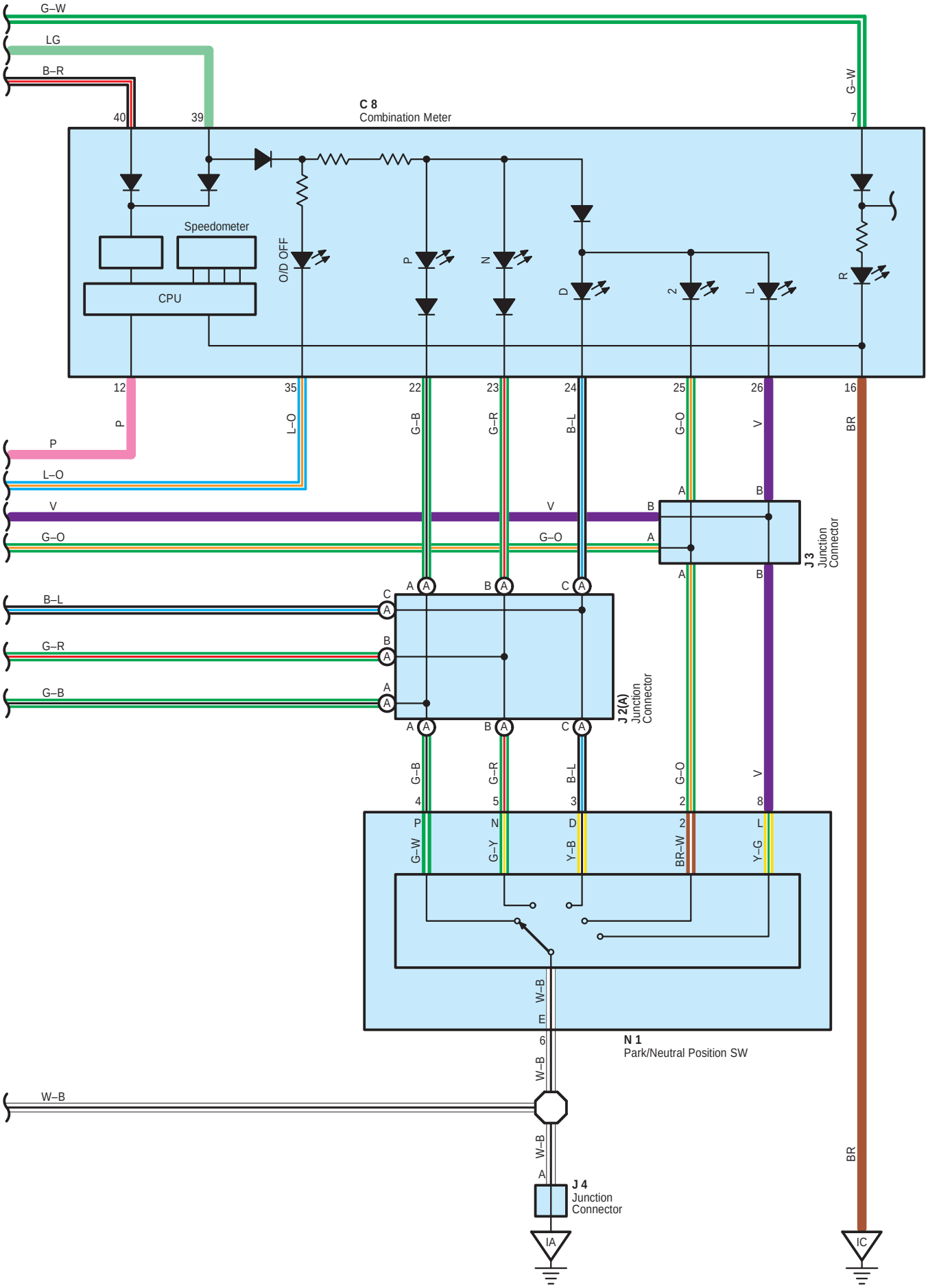

System Outline

Previous automatic transmissions have selected each gear shift using mechanically controlled throttle hydraulic pressure, governor hydraulic pressure and lock–up hydraulic pressure. The electronically controlled transmission, however, electrically controls the line pressure, throttle pressure, lock–up pressure and accumulator pressure etc. through the solenoid valve. The electronically controlled transmission is a system which precisely controls gear shift timing and lock–up timing in response to the vehicle's driving conditions and the engine condition detected by various sensors. It makes smooth driving possible by shift selection for each gear which is the most appropriate to the driving conditions at that time, and by preventing downing, squat and gear shift shock when starting off.

: Parts Location

Code		See Page	Code		See Page	Code		See Page
C8		28 (LHD)	J2	A	39 (*6)	T1		33 (*3)
		38 (*6)	J3		29 (LHD)	T6		29 (LHD)
D1		28 (LHD)			39 (*6)			39 (*6)
		38 (*6)	J4		29 (LHD)	T7		29 (LHD)
E3		28 (LHD)			39 (*6)			39 (*6)
		38 (*6)	J6		29 (LHD)	T8	A	29 (LHD)
E8	A	28 (LHD)			39 (*6)			39 (*6)
		38 (*6)	J8	B	29 (LHD)	T9	B	29 (LHD)
E9	B	28 (LHD)	N1		29 (LHD)			39 (*6)
		38 (*6)			39 (*6)	T10	C	29 (LHD)
E10	C	28 (LHD)	O6		29 (LHD)			39 (*6)
		38 (*6)			39 (*6)	W1		25 (*1)
E13	E	28 (LHD)	S3		29 (LHD)			33 (*3)
E15	F	28 (LHD)			39 (*6)			
J2	A	29 (LHD)	T1		25 (*1)			

: Relay Blocks

Code	See Page	Relay Blocks (Relay Block Location)
1	22	Engine Room R/B (Engine Compartment Right)
2	23 (LHD)	Fuse Block (Left Kick Panel)
	23 (RHD)	Fuse Block (Right Kick Panel)

: Connector Joining Wire Harness and Wire Harness

Code	See Page	Joining Wire Harness and Wire Harness (Connector Location)
IA1	44 (LHD)	Engine Wire and Instrument Panel Wire (Right Kick Panel)
	49 (*6)	Engine Wire and Instrument Panel Wire (Left Kick Panel)
ID1	44 (LHD)	Engine Room Main Wire and Instrument Panel Wire (Right Kick Panel)
	49 (*6)	Engine Room Main Wire and Instrument Panel Wire (Cowl Side Panel RH)

: Ground Points

Code	See Page	Ground Points Location
ED	42 (*1)	Rear Side of Engine Block
	46 (*3)	
IA	44 (LHD)	Right Kick Panel
	49 (*6)	Left Kick Panel
IC	44 (LHD)	Cowl Side Panel LH
	49 (*6)	Right Kick Panel

* 1 : LHD 3SZ–VE * 2 : LHD K3–VE * 3 : RHD 3SZ–VE * 4 : RHD K3–VE * 5 : RHD w/ Heater * 6 : RHD w/o Heater